Revision 5

MOUNTING INSTRUCTION 10 / 2000

			Part-No.	MMSE-No.
MITSUBISHI L200 / 96	**Styling bar complete**	Stainless steel	226019	MZ311555
		Steel black	227019	- - - - - - - -

Mounting set:

Pcs.	Description	Part-No.
1 pc.	Styling bar oblique left	226017 / 227017
1 pc.	Styling bar oblique right	226018 / 227018
1 pc.	Support bar straight front	226032.1 / 227032.1
4 pc.	thread plate	227041
4 pc	washer	227034

Standard parts:

Pcs.	Description	DIN-No.
8 pcs.	hex bolts M10 x 45	933 Zn
4 pcs.	hex bolts M10 x 20	933 A2
2 pcs.	hex bolts M8 x 20	933 Zn
2 pcs.	Hexagon nut M10	934 Zn
2 pcs.	U-washers Ø10	125 Zn
2 pcs.	spring rings Ø10	127 Zn
4 pcs.	U-washers Ø10	125 A2
4 pcs.	spring rings Ø10	127 A2
4 pcs.	Synthetic cap SW17 mm	- - - - -

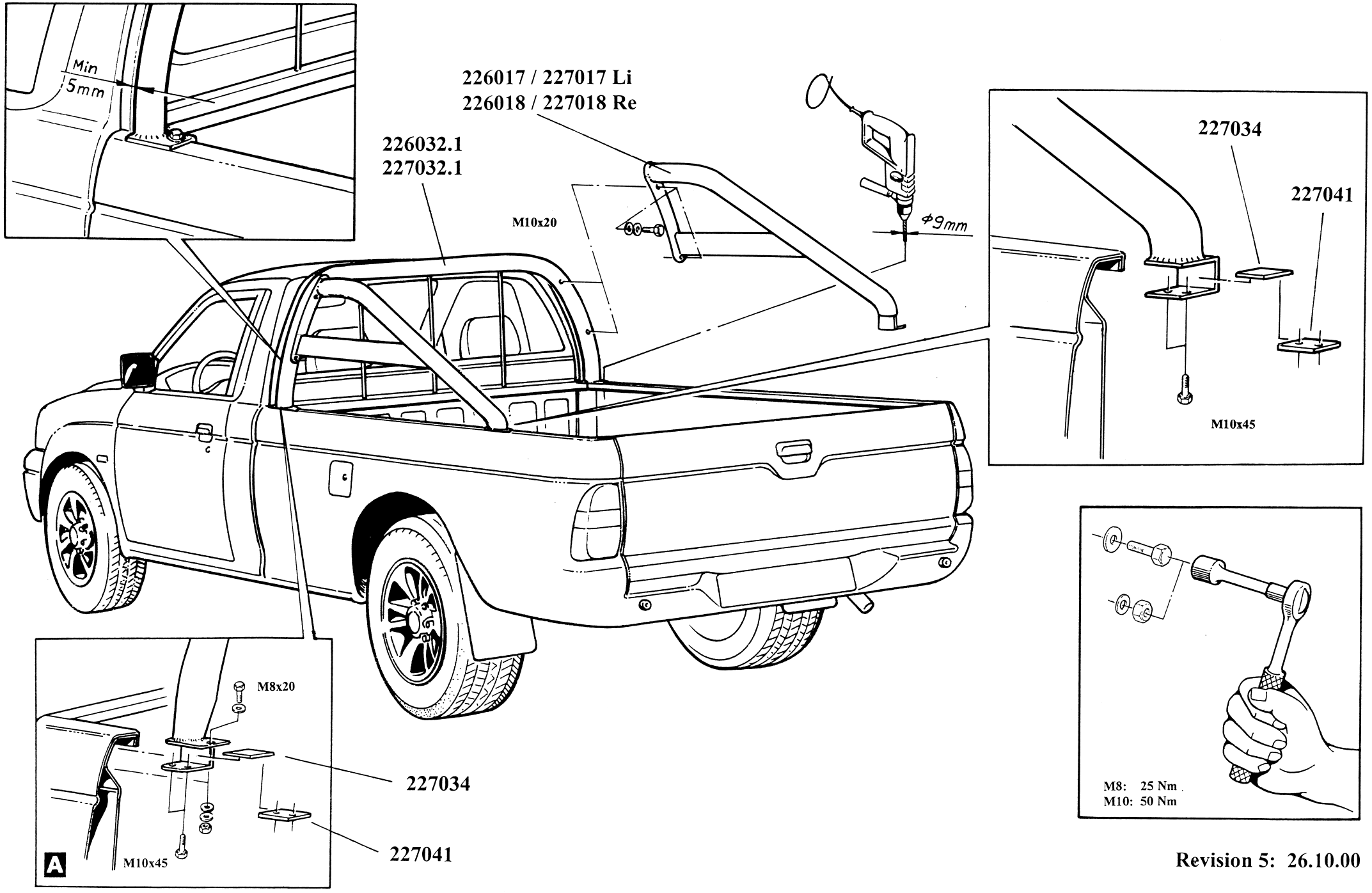

Revision 5: 26.10.00

MITSUBISHI MOTORS

Mounting Instruction
MITSUBISHI L200 / 4WD
1996 - 1998

Styling bar	Stainless steel	MZ311541	*226019*
	Steel black	- - - - - - - -	*227019*